Research Journal of Applied Sciences, Engineering and Technology 5(5): 1573-1577, 2013
ISSN: 2040-7459; e-ISSN: 2040-7467

Submitted: July 12, 2012 Accepted: August 15, 2012 Published: February 11, 2013

Research of the ForCES Routing Optimization

Jingjing Zhou, Weiming Wang and Xudong Zhu
Department of Information and Electronic Engineering, Zhejiang Gongshang University,
Hangzhou, Zhejiang, China

Abstract: The research on For CES technology has made a great progress. However current researches on For CES mainly focus on architecture and techniques. In order to ensure For CES architecture network works well, it is significant to take account of performance (such as routing) optimization for For CES architecture. In this paper, we introduced a minimizing sum of path-cost model based on multiple traffic matrices, combined with negative valence ring algorithm, to optimize the traffic at FE sides in For CES architecture. At last, we give the feasibility discussion of the routing optimization for For CES.

Keywords: Negative valence ring, routing optimization, traffic matrix

INTRODUCTION

Routing optimization adapts traffic distribution by adjusting routing, to achieve the goal of bandwidth allocating, network congestion relief, link load balancing. The algorithm for routing optimization optimizes the routing by adjusting the routing parameters (link weights, routing fraction) when the traffic matrix has been known (Forz and Thorup, 2000). Given that different routing protocols adopt different optimization techniques, routing protocol can be divided into single path routing protocol and multi-path routing protocol. Multi-path routing will be more popular in Internet application as it can improve the network performance (Xu *et al*., 2005). To optimize the multi-path routing techniques has practical and far-reaching meaning in the aspect of improving network performance and communication QoS, and contenting users' increasing demand of high quality of service.

Traffic matrix (Medina *et al*., 2002) clearly reflect the composition of the flows on the link combining with the network routing information, and it is also the key input to network management and traffic engineering task. Routing optimization is the major application of traffic matrix in traffic engineering. Zhang *et al*. (2005), RFC (1195) and Roughan *et al*. (2003a) proved that not only true measured traffic matrix can optimize the routing and decrease the maximum link utilization but also the estimated traffic matrix can. The routing optimization steps are: let traffic matrix be the input; using local search (Roughan *et al*., 2003b; Zhang *et al*., 2005) to calculate and obtain a set of link weights, which applied to real network; at last we evaluate the routing optimization result by comparing the maximum link utilization before and after optimizing. Zhang *et al*. (2005) confirmed that the estimated traffic matrix applied in traffic engineering may also achieve good results.

For CES architecture: ForCES (Forwarding and Control Elements Separation) are a new generation of network architecture based on open programmability (David and Edith, 2003). Network ware is divided into CE (Control Element) and FE (Forwarding Element) according to ForCES protocol, which is used for collaboration and interaction between elements to improve the scalability and manageability of the network system and enhance the expansibility and flexibility of network ware. The architecture is showed as Fig. 1.

As Fig. 1 shown, ForCES architecture consists of at least one or several CE and more than hundreds of FE, which conforms to ForCES protocol standard. The interaction between CE and FE implement on network. Packet in network ware is processed by one or more FE and come out, while FE communicates with others through some network.

The research on ForCES technology and open structure has made good progress, however there is a huge gap between the research on ForCES itself and the research objective for network efficiency, which is mainly reflected in that current research on For CES focus on the structure and technique. For assuring the ForCES operate efficiently and providing users with a far more safe and reliable computing situation, we need to make a real-time monitoring of inner operating situation especially traffic of ForCES routers.

Corresponding Author: Xudong Zhu, Department of Information and Electronic Engineering, Zhejiang Gongshang University, Hangzhou, Zhejiang, China, Tel.: +86 411 87571521

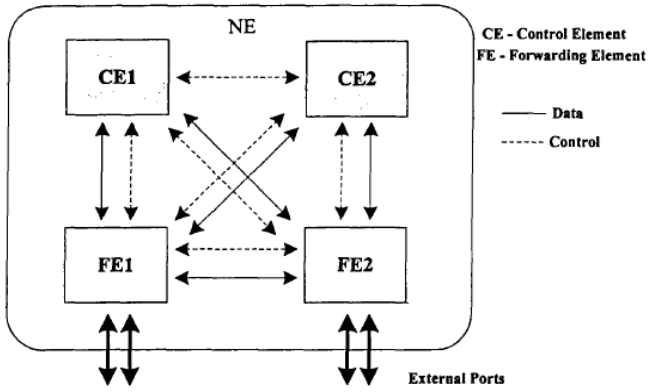

Fig. 1: ForCES architecture

In ForCES architecture, the topology is the key of constraining the process performance of total system. We should put more attention on ForCES routing optimization problem in order to make ForCES message between CE and each FE be transmitted timely and reliably, provide optimal processing solution for FE forwarding, and make ForCES architecture network ware works well.

Current network traffic monitoring is mainly aimed at single and local link. Given the complexity of traffic forming in ForCES router, it is very difficult to evaluate, monitor and analyze ForCES router's overall performance if we only measure the traffic in single or part of channels between CE and FE or FE and FE. Imagine that we may better monitor the performance of ForCES router, if we are able to simultaneously monitor all the network traffic state at each channel of ForCES router, observe and analyses the internal traffic's characteristics and flowing conditions of ForCES router at total network view, set a full view figure for ForCES router's internal traffic. Assuring that ForCES operates well, and we can optimize the router's configuration and structure to improve the performance of ForCES router. In summary, in this paper we apply traffic matrix to observe the traffic at overall view and clearly reflect the traffic form for each channels among ForCES router.

ForCES routing optimization based on multiple traffic matrices: Considering the characteristic of ForCES architecture communication channel and topology between CE and FE or among FE, we may regard all the FE nodes as edge nodes, i.e., origin nodes and destination nodes. In spite of internal traffic forming between CE and FE nodes and among FE nodes, the internal traffic of ForCES architecture can be simplified into the traffic among FE nodes. We plan to propose a method based on IP routing and minimizing sum of path-cost model with multiple traffic matrices to solve routing optimization problems among FE in ForCES system.

Routing optimization is the strategy that used for balancing the network traffic. If congestion occurs at some link, routers automatically adjust the traffic between OD pairs and the probability of packets forwarded at different paths in order to decrease network cost and increase network bandwidth utilization. In this paper, the routing optimization is carried out based on network traffic. Routing optimization can be divided into three categories according to different optimized targets: minimize the maximum link utilization model, minimizing sum of link-cost model and minimizing sum of path-cost model. In the network, it is difficult to estimate traffic matrix accurately because of the inherent challenge of traffic matrix estimation. Meanwhile, network traffic's variability has also lead to a high cost for getting a set of routing optimization that adapt to changes in network traffic, and frequent routing updates make it even worse. However, the routing matrix updates slower than traffic matrix (Zhang *et al*., 2005), so it is desirable to use multiple traffic matrix to estimate sets of routing during routing updating. In summary, it can only be solved by obtaining a set of routing optimization to adapt to different traffic situation.

Now let's have a brief look of routing optimization based on multiple traffic matrices:

Network model is assumed that: IP network is displayed by digraph G (V, E). Here V refers to set of routers; E refers to set of links among routers; directed link's capacity c (a) is defined as the maximum bandwidth that link can withstand. Traffic matrix displays the traffic demand for every OD pair (s, t), so routing problem can be defined as the traffic distribution of the path of non-zero D (s, t) from s to t. The result of traffic routing can be expressed by a matrix R, while the traffic proportion of load D (s, t) in the link a can be expressed by R (s, t, a). Then the load

of link a can be expressed by $l(a) = \sum s,t \in N\, R(s,t,a).D(s,t)$ and the bandwidth utilization is $l(a)/c(a)$.

Define the routing variable $Q_{kl}(i, j)$, represents the percentage of the traffic, which comes from router i to router j and forwarded by link (i, j) at router k. And $Q_{kl}(j)$ represents the percentage of the traffic, which reached router j and forwarded by link (i, j) at router k, while ratio variable $R_{kl}(i, j)$ represents the percentage of traffic comes through the link (i, j) in the traffic which comes from source node i to destination node j.

Cantor *et al* proposed a centralized algorithm using ratio variable $R_{kl}(i, j)$ as control variable and making use of convex optimization to solve this problem. And to increase effectiveness, link cost is estimated to be a piecewise linear function. In addition, Gallager proposed a distribute algorithm based on gradient which using routing variable $Q_{kl}(i, j)$ as control variable.

In multiple traffic matrices, we make the problem of obtaining routing optimization set in traffic matrix formulized and we use router variable Q or ratio variable R as control variable.

Given: network $G = (V, E)$, link capacity C, traffic matrix of n

Minimize: cost A

Condition:
Routing condition: F_y described by Q or R set

Feasibility condition: $F_y \le C$

When the link cost is estimated to piecewise linear function, they can be described by additional conditions.

Sub-condition: for $y \in \{1,...,n\}$, $D_{kl}(f_{y,kl}) \ge k_i \frac{f_{y,kl}}{c_{kl}} + v_{i.}$, $(k,l) \in E$, $i \in \{1,...,6\}$

Assume that Q is set of routing variables that is suitable for multiple traffic matrixes, in order to obtain differential information we need to introduce a virtual variable $v_y = \{v_{y,k}(i, j)\}$, $y \in \{1,...,n\}$, $k, i, j \in V$, where $V_{y,k}(I, j)$ refers to virtual traffic in traffic matrix T_y that injects from node k to node j. Assuming network cost A_y represents traffic matrix T_y's cost, $y \in \{1,...,n\}$, then $A_y = \sum(k,l) \in E\, D_{kl}(f_{y,kl})$ and $A = \sum_{y=1}^{n} W_y A_y$

Assume node data rate is $N_y = \{n_{y,k}(i, j)\}, k, i, j \in V, y \in \{1,...,n\}$. Here $n_{y,k}(I, j)$ represents the data rate of the traffic at node k, which comes from source node i to destination node j in matrix T_y:

$$n_{y,k}(i, j) = 1(k = i)T_y(i, j) + \sum_m n_{y,m}(i, j)Q_{mk}(i, j)$$

$$n_{y,k}(i, j) = T_y(i, j)(\sum_m R_{mk}(i, j) + 1(k = i))$$

In traffic matrix T_y, $y \in \{1,...,n\}$, there is

$$\frac{\partial A}{\partial v_{y,k}(i, j)} = \sum_l Q_{kl}(i, j)[w_y D'_{kl}(f_{y,kl}) + \frac{\partial A}{\partial v_{y,l}(i, j)}])]$$

$$\frac{\partial A}{\partial \phi_{kl}(i, j)} = t_{y,k}(i, j)[D'_{kl}(f_{y,kl}) + \frac{\partial A_y}{\partial r_{y,l}(i, j)}],$$

$$D'_{kl}(f_{y,kl}) = \frac{dD_{kl}(f_{y,kl})}{df_{y,kl}}$$

So can get:

$$\frac{\partial A}{\partial v_{y,k}(i, j)} = \sum_l Q_{kl}(i, j)[w_y D'_{kl}(f_{y,kl}) + \frac{\partial A}{\partial v_{y,l}(i, j)}]$$

$$\frac{\partial A}{\partial Q_{kl}(i, j)} = \sum_y n_{y,k}(i, j)[w_y D'_{kl}(f_{y,kl}) + \frac{\partial A}{\partial v_{y,l}(i, j)}]$$

$$= (\sum_m R_{mk}(i, j) + 1(k = i)) \bullet \sum_y T_y(i, j)[w_y D_{kl}(f_{y,kl}) + \frac{\partial A}{\partial v_{y,l}(i, j)}]$$

There exists a unique $\partial A / \partial Q_{kl}(i, j)$

Negative valence ring algorithm: Digraph $G(N, A)$ presents a network. a_{ij} is a directed link from n_i to n_j, whose capability is c_{ij} and true load is l_{ij}. In the situation of single orgin s and single destination t, traffuc demand F_{st} in the network must match following conditions:

Nonnegative and finite: $0 \le l_{ij} < c_{ij}$

Continuity: $\sum_{nj \in \tau(n_i)} l_{ij} - \sum_{nj \in \tau'(n_i)} l_{ij} = \begin{cases} Fn_i = n_s \\ -Fn_i = n_t \\ 0 \ other \end{cases}$

Here $\tau(n_i) = \{n_j : a_{ij} \in A\}$, $\tau(n_i) = \{n_j : a_{ji} \in A\}$, limit conditions amounts to N-1. We call traffic distribution which matches these two conditions a feasible flow.

Maintaining F_{st} unchanged and give an initial feasible flow, we draw out a complementary graph of G

(N, A) according to the load and cost of links. If there is a directed loop in the complementary graph, and the total link cost of this loop's link is negative, we call this loop the negative valence ring. It wouldn't destroy the nonnegative and finite characteristic of each node that increasing flow along the negative valence ring, so that we can obtain a new feasible flow with the lowest cost.

The progress of algorithm for negative valence ring is concluded as follows:

Start with any feasible flow and treat it as initial feasible flow; Draw out complementary graph;

See if there is a negative valence ring in the complementary ring. If not, algorithm finishes, otherwise increase flow along the negative valence ring; Adjust each side's load of previous graph, and return to step (1).

This study introduced algorithm negative valence ring and applied in traffic balancing model based on traffic matrix. The algorithm for minimum cost network based on negative valence ring is defined as follows: Same traffic demand forms set of paths and we draw out a complementary graph according load and capacity of paths; If there is a directed loop in the complementary graph, and the total link cost of this loop's link is negative, then we increase the traffic of size Δ at the negative valence loop, and recalculate the sum of loop's link cost. If it still be negative, then we keep on increasing the traffic size of Δ, until the sum of loop's link cost become over or equal to 0.

Evaluation: Model for traffic balancing on basis of the FE sides of ForCES architecture. We build network topology figure as Fig. 2, and the set of paths between any source pair FE1 and FE2-which is {l1-l2-l5, l1-l3-l4-l5}-is shown in the figure, where every link's capacity is 200, the traffic demand between FE1 and FE2 is 100, the background traffic of link 14 is 40, and the increased traffic Δ is 5. Here we use minimum network cost algorithm based on negative valence loop to make traffic balance.

At first we build a feasible flow and assume that link traffic L = {100, 50, 50, 90, 140}, when link cost C = {1, 1/3, 1/3, 9/11, 7/3}. Secondly we construct complementary graph according to the load and capacity of original road map. The complementary graph is shown as Fig. 3, where we can see that there is negative valence loop l2-l4-l3 whose link cost is -9/11. We increase the traffic of size 5 along the direction of negative valence loop, and recalculate link's load and redraw complementary graph. If negative valence loop still exists, keep on increasing traffic along negative valence loop until there is no negative valence loop, and

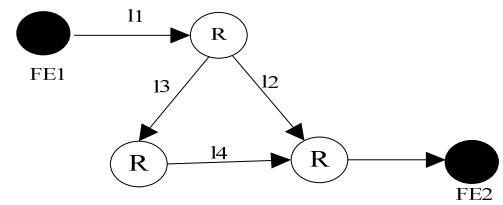

Fig. 2: Network topology for forces

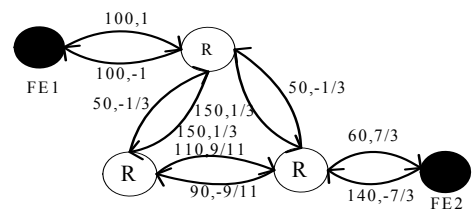

Fig. 3: Network traffic for forces

at this point the flow have minimum cost which is L = {100, 80, 20, 60, 140} by calculating.

Steps of the algorithm:

1. Network traffic request data is saved in traffic matrix R [M][N]
2. Network topology is saved in Graph
3. initialize a feasible flow; parameter is R and Graph
4. Read a network traffic OD from traffic matrix and distribute it randomly
5. All paths of network flow OD form graph l
6. Enter a while (true) loop, and draw complementary graph for graph l. If there is no negative valence loop break the loop, otherwise go to step (7)
7. Increase flow size of Δ along with negative valence loop direction and recalculate link cost, return to (6).

CONCLUSION AND FUTURE WORK

With the rapid development of network, open and reconfigurable network facility can well achieve the goal for multi-network integration, so that the facility for NGN (Next Generation Network) will be more and more popular. And router with ForCES architecture is one of the most important means for NGN. So it seems particularly important to measure and monitor the traffic inside of ForCES architecture.

In this paper, we mainly discussed the routing optimization and traffic balancing for FE sides in ForCES architecture based on estimated traffic matrix. After analyzing different kinds of routing protocols and algorithms for touting optimization, we introduced a

minimizing sum of path-cost model based on multiple traffic matrices, combined with negative valence ring algorithm, to balance the traffic of all the links in the FE topology which at last confirmed by simulation experiment.

However in this paper we only give the discussion of the feasibility of the routing optimization algorithm for ForCES architecture. So at the next period we intend to test and verify the algorithm for the ForCES routing optimization through experiments.

ACKNOWLEDGMENT

This work was supported by National Natural Science Foundation of China (No. 61102074, 61170215, 60903214, 60970126), Zhejiang Sci and Tech Project (No. 2011C21049), A Project Supported by Scientific Research Fund of Zhejiang Provincial Education Department (Y200908196, Z20097549), Zhejiang Provincial NSF China (Y1111117, Y1090452 and Y1100871).

REFERENCES

David, A. and C. Edith, 2003. Making intra-domain routing robust to changing and uncertain traffic demands: Understanding fundamental tradeoffs. Conference on Applications, Technology, Architectures and Protocols for Computer Communications, Karsiruhe, Germany, pp: 313-324.

Forz, B. and M. Thorup, 2000. Internet traffic engineering by optimizing OSPF weights. Proceedings of the 19th Annual Joint Conference of the IEEE Infocom, pp: 519-528.

Medina, A., N. Taft, K. Salamatian, S. Bhattacharyya and C. Diot, 2002. Traffic matrix estimation: Existing techniques and new directions. ACM SGCOMM Comput. Commun. Rev., 32(4): 161-174.

RFC, 1195. Use of OSI IS-IS for Routing in TCP/IP and Dual Environments [S]. Retrieved from: http://www.rfc-editor.org/rfc/rfc1195.txt.

Roughan, M., M. Thorup and Y. Zhang, 2003a. Traffic engineering with estimated traffic matrices. Proceedings of the 3rd ACM SIGCOMM Conference on Internet measurement, Miami Beach, FL, USA, pp: 248-258.

Roughan, M., M. Thorup and Y. Zhang, 2003b. Performance of estimated traffic matrices in traffic engineering. Proceedings of the 2003 ACM SIGMETRICS International Conference on Measurement and Modeling of Computer System, San Diego, CA, USA, pp: 326-327.

Xu, K., J.P. Wu and M.W. Xu, 2005. Advanced Computer Networks [M]. China Machine Press, Beijing, pp: 176-213.

Zhang, C., Y. Liu, W. Gong, F.K. James, R. Moll, *et al*., 2005. Optimal routing with multiple traffic matrices. Proceedings of the 24th Annual Joint Conference of the IEEE Computer and Communications Societies (INFOCOM 2005), Miami, FL, USA, pp: 607-618.