Research Journal of Applied Sciences, Engineering and Technology 4(18): 3501-3504, 2012
ISSN: 2040-7467

Submitted: April 27, 2012 Accepted: May 13, 2012 Published: September 15, 2012

The Feasibility Analysis of Wastewater Source Heat Pump Using the Urban Wastewater Heat

[1,2]Yaxiu Gu and [1]Huqiu Deng
[1]Department of Environmental Science and Engineering,
[2]Opening Research Laboratory about Water Resource and Land Environment in Arid and Semiarid Region under the Ministry of Land Resource, Chang' an University, Xi' an 710054, China

Abstract: There is a large potential in the heat losses from the urban wastewater. By integrating a heat pump to utilize this heat, we can produce a higher temperature heat supply while maintaining a low temperature-lift requirement. This leads to the possibility of directly regenerating the hot water supply through wastewater heat recovery. Based on the plan of Xi'an urban Wastewater Source Heat Pump (WWSHP) system, the discussion and summary about wastewater characteristic parameters were made according to the investigation and analysis on the status of five wastewater treatment plants in Xi'an. The scheme of using WWSHP system for central heating instead of traditional heating supply system was discussed in this study. Taking an integrated residential area in Xi'an as an example, the feasibility analysis on using urban untreated wastewater source heat pump technology for heating and cooling was discussed in detail.

Keywords: Heat recovery, the feasibility analysis, wastewater source heat pump

INTRODUCTION

Sustainable development requires methods and tools to measure and compare the environmental impacts of human activities for various products (Dincer, 2001). Changes towards environmental improvements are becoming more politically acceptable globally, especially in developed countries. Society is slowly moving towards seeking more sustainable production methods, waste minimization, reduced air pollution from vehicles, distributed energy generation, conservation of native forests and reduction of greenhouse gas emissions (Sims, 2003). To monitor emission of these greenhouse emissions, an agreement was made with the overall pollution prevention targets, the objectives of the Kyoto Protocol agreement (Nielsen *et al*., 2009).

Heat pumps can either be fossil fired or driven by heat from Combined Heating and Power (CHP) systems or other sources. In addition, it has outstanding energy saving effect since it is operated at high COP without air pollution. Utilizing solar energy, geothermal energy, waste heat and exhaust heat as the heat source to complete the refrigerating and air conditioning process is an important way to develop more efficient utilization of energy and launch the technological transformation taking energy-saving as its key part.

China is facing water crisis. More than 400 cities are lacking enough water resources and more than half rivers are polluted. To realize sustainable development in the 21st century, we should first provide enough water resources to every person and keep a friendly, leisurely water environment. Under the idea of sustainability, concept for a sustainable urban sewerage system is put forward (Zhang *et al*., 2007). An urban sewerage system cannot only be a basic facility for draining rainwater and wastewater to protect the urban environment and public water bodies, but must also contribute to the restoration of the water environment in order to maintain a healthy social water cycle.

The Wastewater Source Heat Pump (WWSHP), which is a new water use and treatment strategy to tackle the water problems of China and to realize the sustainable development, recovers the heat of wastewater. The WWSHP air conditioning system as residential applications is feasible and can reduce the need of energy systems based on fossil fuel for cooling, heating and hot water supply purposes.

Due to the temperature of wastewater from wastewater treatment plant is relatively stable in the four seasons. The temperature is 10 to 16 in winter, which is higher than air temperature. The temperature is 20 to 26 in summer, which is lower than air temperature. According to the characteristic parameters of the wastewater, ground surface water and groundwater, WWSHP exchanges heat with wastewater through the heat exchanger. In winter, the treated wastewater flows

Corresponding Author: Yaxiu Gu, Department of Environmental Science and Engineering, Chang'an University, Xi'an 710054, China

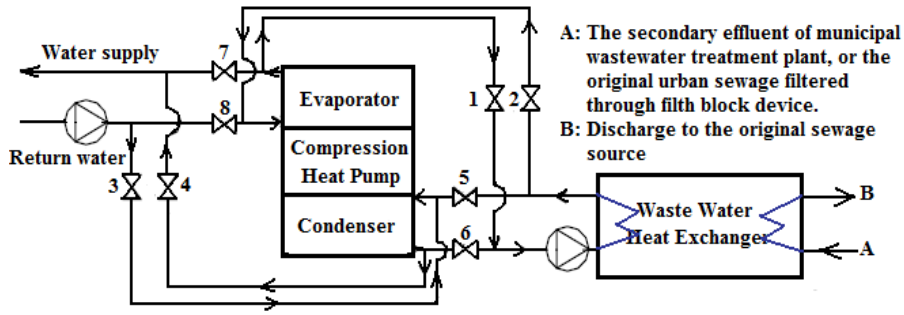

Fig. 1: Operation principle of WWSHP system

into pipes of evaporator and the heat of wastewater is absorbed by the refrigerant in evaporator and then the heat from the condenser is transmitted to buildings through the air conditioning system. At the time, the wastewater heat is regarded as the eat source In summer, the treated wastewater flows into pipes of condenser and absorbs heat from condenser and then the heat from the evaporator after the refrigerating cycle is transmitted to buildings through the air conditioning system. At the time, the wastewater heat is regarded as the old source

Recently, researchers have carried out much research about urban WWSHP systems, including original sewage source heat pump system. In Japan and Korea, Baek *et al*. (2005) did a simulation study of district cooling and heating systems using sewage water as an energy source. Results show that compared with conventional air-source heat pumps, WWSHP could help reducing energy consumption by 34%, lowering the emission of carbon dioxide (CO_2) by 68% and controlling the generation of nitrogen oxides (NOx) by 75%. Wu *et al*. (2006), Qian *et al*. (2007) and Wu *et al*. (2008a, b) studied the soft-dirt characteristic of the heat-exchanging pipe and its effects on the performance of an Urban Sewage Source Heat Pump (USSHP) system and studied the technical and economic analysis of the temperature rise of heat pump in the sewage disposal process. Yao *et al*. (2006) simulated the WWSHP for low temperature wastewater treatment.

The purposes of this study are to evaluate the efficiency and design the scheme of using WWSHP system for central heating, cooling and hot water supplying instead of traditional heating, cooling and hot water supplying system. Based on the wastewater characteristic parameters according to the investigation and analysis on the status of five wastewater treatment plants in Xi n and taking an integrated residential area in Xi n as an example, the feasibility analysis on WWSHP system using urban treated or untreated wastewater is to be discussed.

METHODOLOGY

Working principle: The WWSHP system is shown in Fig. 1 (Zhao *et al*., 2010). In the winter, valves 1-4 are open and valves 5-8 are closed. The wastewater heat exchanger takes the heat from the second effluent municipal wastewater treatment plant or the original urban sewage filtered through filth block device and sends it to the evaporator side of the heat pump as a low grade heat source. The compression heat pump system releases the heat at the condenser side and sends the heat to the heat-supplying system. That is the heating cycle of the WWSHP system.

In the summer, valves 1-4 are closed and valves 5-8 are open. The condensing heat is released to the treated wastewater or filtered original sewage through the wastewater heat exchanger. The compression heat pump system absorbs the ambient heat at the evaporator side. Thus the temperature of the coolant water decreases to cool down the ambient temperature of the end users. That is the refrigerating cycle of the WWSHP system.

As shown in Fig. 1, the urban original sewage source heat pump system is also working as this principle. But it needs to add filtrating equipments in the system, such as filth block device. Before the urban original sewage flows into the wastewater heat exchanger, it must be filtered through filth block device to reduce the corrosion and extend the service life of the wastewater heat exchanger. Meantime, spray heat exchanger should be used as the wastewater heat exchanger because spray heat exchanger has higher anti-blocking and anti-fouling performance than shell and tube heat exchanger or immersion heat exchanger. Also it has higher heat transfer coefficient.

The combination of the wastewater heat exchanger and filth block device is equivalent to the cooling tower in traditional air conditioning system.

Wastewater characteristic parameters: Large amount of wastewater is discharged into urban sewerage pipeline systems and is transported to the wastewater treatment plant. This kind of wastewater contains much energy to be extracted by WWSHP technology. To this day, there are 15 wastewater or sewage treatment plants in Xi n including those of planning, under construction and in-service. The five plants which had been in service were

Table 1: Wastewater characteristic parameters of wastewater treatment plant

Plant name	No. 1	No. 2	No. 3	No. 4[a]	No. 5
Wastewater discharge outlet	Zao river	Zao river	Chan river	Wei river	Wei river
Drainage area (km^2)	33	53.43	21	45	45.68
Effluent BOD5 (mg/L)	≤19	≤20	≤60	≤20 (7)	≤20
Effluent COD (mg/L)	≤80	≤100	≤20	≤60 (34.5)	≤30
Effluent SS (mg/L)	≤16.5	≤20	≤20	≤20 (10)	≤20
Effluent NH_4^+-N (mg/L)	≤10	≤25	≤15	≤15 (2.9)	≤8
Effluent TN (mg/L)	≤20	≤20	≤20	≤20 (14.61)	≤20
Effluent TP (mg/L)	≤3	≤1	≤0.5	≤1 (0.68)	≤1
Effluent pH (-)	6-9	6-9	6-9	6-9	6-9
Water treatment capacity ($\times 10^4 m^3/d$)	16-22	30-40	10-23	20-40 (21.26)	20-40
Summer effluent temperature (°C)	22-24	23-25	20-24	20-24	21-26
Winter effluent temperature (°C)	16-18	15-17	12-15	12-14	10-14

a: Data within the parentheses are the average operating values from January to September in 2010

chosen to be investigated and they are all reclaimed wastewater production plants. They are Xi n Wastewater Treatment Plant serving northwestern and southern suburbs, Xi n BeiShiQiao Sewage Purification Center serving western and southern suburbs, Xi n No. 3 Wastewater Treatment Plant serving littoral region of Chan River, Xi n No. 4 Wastewater Treatment Plant serving city and northern suburbs and Xi n No. 5 Wastewater Treatment Plant serving eastern, southeast and northeast suburbs, respectively (hereinafter abbreviated as No. 1 to 5). Wastewater characteristic parameters were summarized and analyzed as shown in Table 1.

This study adopted Xi n No. 4 Wastewater Treatment Plant as a pilot project. The surrounding buildings were simulated and calculated. Through the operating data such as the effluent temperature, the effluent flow rate, the effluent water quality (Table 1), the type of the WWSHP unit can be designed.

RESULTS

The feasibility analysis: According to the wastewater characteristic parameters of Xi n No. 4 Wastewater Treatment Plant, the feasibility analysis of heat pump technology using urban treated wastewater as energy source for central heating and cooling was discussed as follows:

Quantity of wastewater flow: According to the regular pattern of effluent in wastewater treatment plants, the quantity discharged to the urban sewerage pipeline systems in summer is higher than that in winter. The discharge amount is inversely proportional to atmospheric temperature. And also, the discharge quantity during 9:00 to 11:00 and 22:00 to 24:00 is the maximum in a day, while the discharge quantity during 3:00 to 5:00 and 14:00 to 16:00 is the minimum.

Due the maximum water treatment capacity of this plant is 2×10^5-4×10^5 m^3/d, the minimum quantity of wastewater used for WWSHP system can reach to 7500 m^3/h, which is calculated adopting the seasonal adjustment coefficient as 0.9.

Wastewater quality evaluation: The treated water of this plant attained the integrated wastewater 1-B discharge standard (GB18918-2002) through secondary treatment of wastewater. After treated, as shown in Table 1, the critical Chemical Oxygen Demand (COD_{CR}) is 34.5 mg/L, the Biological Oxygen Demand (BOD5) is 7 mg/L, the Suspended Solids (SS) is 10 mg/L, NH_4^+-N content is 2.9 mg/L, the Total Nitrogen (TN) content is 14.61 mg/L and the Total Phosphorus (TP) content is 0.68 mg/L. And the pH value is 6 to 9. Therefore, the wastewater quality is fine that it can be used in the WWSHP system.

General calculation of cooling load and heating load: In this study we used the heat pump system of the buildings that uses the treated wastewater, effluent from No. 4 plant, as a heat source. Buildings project located about 2.5 km southeast of No. 4 plant. Buildings type is residential and commercial. As shown in Table 2, total area is 530,000 m^2, with which 400,000 m^2 for residential heating and 54,000 m^2 for commercial air-conditioning. Central air conditioning system, which adopted the WWSHP unit as heat/cold source facilities, was used for cooling and heating in commercial zones. The WWSHP air conditioning system provides hot water in winter, with which supply water is 50 while return water is 40 , to supply low-temperature hot-water floor radiant heating for fifteen 30 floors residential buildings and to supply air-conditioning heating by fan coil for commercial zones. Meantime, the WWSHP air conditioning system provides cold water in summer, with which supply water is 7 while return water is 12, to supply air-conditioning cooling by fan coil for commercial zones. The heat/cooling load was general calculated using heat/cold-index approximate calculation model. The detail data are shown in Table 2.

Selection of WWSHP units and heat exchanger: Due the buildings are high-rise building with 30 floors, high zone (1st to 15th floor) and low zone (16th to 30th floor) should be considered to be divided. Due the 1-B effluent wastewater was used in this system, the wastewater

Table 2: General calculation of cooling load and heating load of "X" buildings

Parameters	Dwelling	Commercial
Total area ($X10^4$ m^2)	44.4	8.6
Heating heat index (W/m^2)	55	-
Air-conditioning heat index (W/m^2)	-	100
Heating heat load (kW)	21978	-
Air-conditioning heat load (kW)	-	5400
Air-conditioning cold index (W/m^2)	-	180
Cooling load (kW)	-	9720
Total heat load in winter (kW)	27378	
Total cooling load in summer (kW)	9720	

quality is fairly good so that heat pump unit with flooded evaporator can be chosen. Compared to dry-expansion shell and tube evaporator, flooded evaporator has the higher heat transfer efficiency, COP values and larger unit capacity. Meantime, flooded heat exchange structure is more suitable for WWSHP. Under the premise of maintaining the same efficiency, the use of flooded evaporator can decrease the quantity demand for wastewater. Therefore, the consumption of wastewater pumps can be reduced and more economical investment can be realized.

Total heat load in winter (heating and air-conditioning heat load) of the high zone is 10989 kW, while that of the low zone is 16389 kW. Thus three units WWSHP, which unit nominal heating capacity is 3826 kW, were selected for high zone heating. Four units WWSHP, which unit nominal heating capacity is 4104 kW, were selected for low zone heating and air-conditioning. Total cooling load in summer (air-conditioning cooling load) is 9720 kW, which supplying cooling for the commercial region in low zone. Thus, three units WWSHP, which is the same model number as that for low zone heating, were selected for cooling. The unit nominal cooling capacity is 3800 kW.

Each WWSHP units are equipped with one wastewater heat exchanger. After calculated and selected, the buildings cooling/heating facilities include seven WWSHP and seven wastewater heat exchangers.

The buildings basements contain seven sets of WWSHP facilities for the buildings air-conditioning and floor radiant heating.

If desired, the WWSHP system can also provide hot water for use of sauna.

CONCLUSION

In this study we demonstrate the potential of integrating a heat pump directly into the heat recovery from wastewater. Sustainable urban sewerage systems for the 21st century in China are the lifeline of water environmental restoration. Their function goes beyond the traditional task of discharging rainwater and wastewater and preventing the pollution of public water bodies. It is basic to resources and energy recycling. The Wastewater Source Heat Pump (WWSHP) system can recover the heat of wastewater. It is a new water use and treatment strategy to tackle the water problems of China and to realize the sustainable development. The WWSHP air conditioning system as residential applications is feasible and can reduce the need of energy systems based on fossil fuel for cooling, heating and hot water supply purposes.

ACKNOWLEDGMENT

This project was supported by the Special Fund for Basic Scientific Research of Central Colleges, Chang'an University and Opening Fund for the Key Laboratory of Land Resource Ministry (No. CHD2012JC027).

REFERENCES

Baek, N.C., U.C. Shin and J.H. Yoon, 2005. A study on the design and analysis of a heat pump heating system using wastewater as a heat source. Sol. Energy, 78: 427-440.

Dincer, I., 2001. Environmental issues. I. Energy utilization. Energ. Source., 23: 69-81.

Nielsen, J.B.H., T.A. Seadi and P.O. Popiel, 2009. The future of anaerobic digestion and biogas utilization. Bioresource Technol., 100: 5478-5484.

Qian, J.F., X.H. Wu, D.X. Sun and R.H. Wu, 2007. Effect on fluxion and heat transfer due to the thickness of soft dirt in shell sewage heat exchanger. Fluid Machinery, 35: 74-78.

Sims, R.E.H., 2003. Bioenergy to mitigate for climate change and meet the needs of society, the economy and the environment. Mitigation Adaptation Strategies Global Change, 8: 349-370.

Wu, R.H., C.H. Zhang, D.X. Sun and G.X. Ma, 2006. Research on the soft-dirt characteristic of heat-exchanging pipe in using urban original wastewater as cooling and heating source. Fluid Machinery, 34: 58-61.

Wu, R.H., Y. Xu, D.X. Sun and N.Q. Ren, 2008a. Research and utilization progress of intake water heat-exchange technique of sewage and surface-water source heat pump systems. Heat. Ventilating Air Cond., 38: 25-30.

Wu, R.H., Y. Xu, D.X. Sun and N.Q. Ren, 2008b. Technology economic analysis of heat pump temperature rising in sewage disposal process in cold climate area. Act Energiae Solaris Sinica, 29L: 267-271.

Yao, Y., Y. Song and W. Na, 2006. Simulation and analysis of sewage source heat pump for low temperature wastewater treatment. China Water Wastewater, 22: 70-74.

Zhang, J., X.S. Cao and X.Z. Meng, 2007. Sustainable urban sewerage system and its application in China. Res., Conserv. Recycling, 51: 284-293.

Zhao, X.L., L. Fu, S.G. Zhang, Y. Jiang and Z.L. Lai, 2010. Study of the performance of an urban original source heat pump system. Energ. Conv. Manage., 51: 765-770.